Chapter 47

Cooling System Technology

Name _____ Date _____

Instructor _____ Score _____

Objective: After studying this chapter, you will be able to summarize the functions of engine, supercharger, turbocharger, DEFI, and HV (hybrid vehicle) cooling systems.

1. Explain the general purpose and importance of a cooling system.

_____

_____

_____

_____

_____

2. Name the most common types of cooling systems found on modern gas, diesel, hybrid, and electric drive trains.

_____

_____

_____

_____

3. *True or False?* When an HV engine control module circuit gets too hot, power transistors can go into thermal runaway, capacitors and resistors can burn, and printed circuit boards can burn out. _____

Cooling System Functions

_____ 4. All of the following are functions of a cooling system *except* _____.
   (A) providing a means for warming the passenger compartment
   (B) causing the engine to seize
   (C) removing excess heat from the engine
   (D) maintaining a constant engine operating temperature

5. What can happen if excess heat is *not* removed from the engine?

_____

_____

_____

Copyright Goodheart-Willcox Co., Inc. May not be reproduced or posted to a publicly accessible website.

6. Combustion flame temperature can reach _____°F. _____

7. An engine operating temperature is usually between _____°F and _____°F. _____

_____

8. Why is it important for an engine to warm up rapidly?

_____

_____

_____

_____

Cooling System Types

9. What is an air cooling system?

_____

_____

_____

_____

10. Air can be routed over the cylinder fins by plastic or sheet metal ducts and _____. _____

11. What advantages does a liquid cooling system have over an air cooling system?

_____

_____

_____

_____

12. What is reverse flow cooling?

_____

_____

_____

_____

_____

13. Explain the operation of a closed cooling system.

_____

_____

_____

_____

_____

_____

_____

Copyright Goodheart-Willcox Co., Inc. May not be reproduced or posted to a publicly accessible website.

Name _____

14. _____ cooling systems are no longer used on automobiles. _____

Cooling System Parts

15. Briefly explain each of the following basic parts of a cooling system.

    Water pump:

    _____

    Radiator hoses:

    _____

    Radiator:

    _____

    Fan:

    _____

    Thermostat:

    _____

16. What kind of impellers are sometimes used to reduce engine power consumption?

    _____

17. Identify the parts of the water pump.

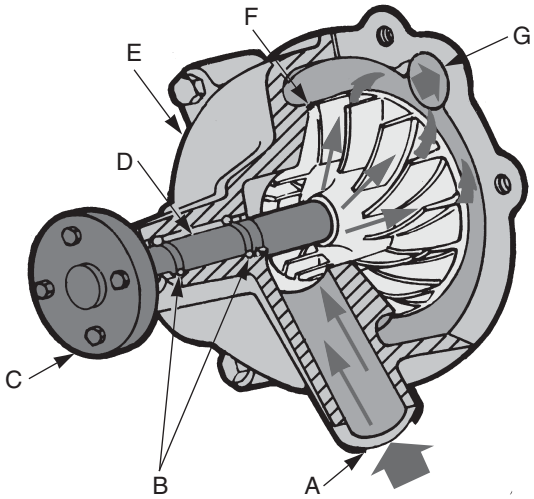

(A) _____

(B) _____

(C) _____

(D) _____

(E) _____

(F) _____

(G) _____

Copyright Goodheart-Willcox Co., Inc. May not be reproduced or posted to a publicly accessible website.

For questions 18–24, match the following terms and identifying phrases.

_____ 18. Fits between the engine and pump housing to prevent coolant leakage.

_____ 19. Steel shaft that transfers turning force from the hub to the impeller.

_____ 20. Provides mounting place for belt pulley and fan.

_____ 21. Iron or aluminum casting that forms the main body of pump.

_____ 22. Disk with fan-like blades; it spins and produces pressure and flow.

_____ 23. Prevents coolant leakage between pump shaft and pump housing.

_____ 24. Plain or ball bearings that allow the pump shaft to spin freely in housing.

(A) Water pump shaft
(B) Water pump bearings
(C) Water pump housing
(D) Water pump impeller
(E) Water pump gasket
(F) Water pump seal
(G) Water pump hub

_____ 25. The water pump normally mounts on the _____ of the engine.
(A) front
(B) side
(C) top
(D) center

26. A water pump traps coolant between the impeller blades and the coolant is thrown outward by _____. _____

27. A(n) _____ uses a large dc motor and an impeller to force coolant through the engine's water jackets. _____

For questions 28–34, match the following terms and identifying phrases.

_____ 28. Hold the radiator hoses and heater hoses on their fittings.

_____ 29. Frequently used in the lower radiator hose to prevent the hose from collapsing.

_____ 30. Carry coolant between the engine water jackets and the radiator.

_____ 31. Has an accordion shape and can be bent to different angles.

_____ 32. Uses an elongated gear that engages slots in the clamp strap to allow tightening around the hose.

_____ 33. Small-diameter hoses that carry coolant to the heater core.

_____ 34. Manufactured in a special shape, with bends to clear the cooling fan and other parts.

(A) Radiator hoses
(B) Molded hose
(C) Flexible hose
(D) Hose spring
(E) Heater hoses
(F) Hose clamps
(G) Worm-drive hose clamp

For questions 35–40, match the following terms and identifying phrases.

_____ 35. Inner tank for cooling automatic transmission or transaxle fluid.

_____ 36. Metal or plastic ends that fit over the core tube ends.

_____ 37. Pressurizes the water and antifreeze solution.

_____ 38. A fitting on the bottom of the tank for draining coolant.

_____ 39. The fragile center section of the radiator.

_____ 40. An opening for adding coolant.

(A) Radiator core
(B) Radiator tanks
(C) Radiator filler neck
(D) Transmission oil cooler
(E) Radiator petcock
(F) Radiator cap

Copyright Goodheart-Willcox Co., Inc. May not be reproduced or posted to a publicly accessible website.

Name _____

41. A crossflow radiator has its tanks on the _____ of the core. _____

42. Why is a transmission oil cooler often placed in the radiator of cars with automatic transmissions or transaxles?

_____

_____

_____

43. Name two functions of a radiator cap.

_____

_____

_____

_____

_____ 44. For every pound of pressure increase, water's boiling point goes up about _____°F.
(A) 1
(B) 3
(C) 5
(D) 10

45. Typical radiator cap pressure is _____ psi. _____

46. What could occur without a cap vacuum valve?

_____

_____

_____

For questions 47–52, match the following terms and identifying phrases.

_____ 47. Provides cooling action with an electric motor and a thermostatic switch.

_____ 48. Designed to slip at higher engine speeds.

_____ 49. Bolts to the water pump hub and pulley.

_____ 50. A small direct current motor.

_____ 51. Has a temperature-sensitive, bimetal spring that controls fan action.

_____ 52. Has thin, flexible blades that alter airflow with engine speed.

(A) Fluid coupling fan clutch
(B) Thermostatic fan clutch
(C) Flex fan
(D) Engine-powered fan
(E) Electric cooling fan
(F) Fan motor

Copyright Goodheart-Willcox Co., Inc. May not be reproduced or posted to a publicly accessible website.

53. How does a coolant temperature sensor work?

_____

_____

_____

_____

_____

_____

54. How does a radiator shroud keep the engine from overheating?

_____

_____

_____

_____

55. Why are high thermostat heating ranges used in modern automobiles?

_____

_____

_____

56. When the engine is cold, the thermostat will be _____, _____ and coolant cannot circulate through the radiator.

57. What is the purpose of a bypass valve?

_____

_____

_____

58. What type of thermostat has a second valve for routing all the hot coolant through the radiator?

_____

Cooling System Instrumentation

59. How does the engine temperature warning light work on many late-model vehicles?

_____

_____

_____

_____

60. When the engine is cold, the engine temperature gauge sending unit has _____ resistance. _____

Copyright Goodheart-Willcox Co., Inc. May not be reproduced or posted to a publicly accessible website.

Name _____

Antifreeze

61. What does antifreeze prevent?

_____

_____

_____

62. Why does antifreeze cool the engine better than water?

_____

_____

_____

63. Ideal cooling and protection from freeze up is a mixture of _____% water and _____% antifreeze. _____

64. A(n) _____ is a 120-volt heating element mounted in the block water jacket that can be used to aid engine starting in cold weather. _____

Supercharger Cooling Systems

65. *True or False?* Hot air from a supercharger carries more oxygen for combustion than an equal amount of cooler air. _____

66. What is an intercooler for a supercharger?

_____

_____

_____

Hybrid Cooling Systems

For questions 67–69, match the following terms and identifying phrases.

_____ 67. Uses an electric blower fan and a system of ducts to route cool passenger compartment air around the HV battery pack.

_____ 68. Uses an electric water pump, small diameter hoses, and a separate radiator or heat exchanger to pull heat out of the HV battery.

_____ 69. Uses either circulated air or circulated liquid coolant to remove excess heat from compartments in the electric powertrain.

(A) Hybrid cooling system
(B) Hybrid air cooling system
(C) Hybrid liquid cooling

70. Name three areas where high temperatures can develop in a hybrid's electric powertrain.

_____

_____

_____

Copyright Goodheart-Willcox Co., Inc. May not be reproduced or posted to a publicly accessible website.

71. High-power hybrids usually require _____ liquid cooling to prevent motor-generator stator winding failure. _____

72. An HV battery radiator has intake air routed through the cooling fins of the _____ or heat exchanger before it circulates over the battery packs. _____

73. In a motor-generator cooling system, _____ that carry liquid coolant are formed or machined inside the stator housing during manufacture. _____

74. A coolant heat storage system is needed to help keep the hybrid's _____ engine warm when it is not running and the vehicle is in full electric propulsion. _____

Copyright Goodheart-Willcox Co., Inc. May not be reproduced or posted to a publicly accessible website.